CEILING JOIST SCHEDULE	
SIZE	MAX. SPAN
2x4 @ 24" O.C. 2x4 @ 16" O.C.	8'-0" 9'-2"
2x6 @ 24" O.C. 2x6 @ 16" O.C.	12'-6" 14'-4"
2x8 @ 24" O.C. 2x8 @ 16" O.C.	16'-6" 19'-0"
2x10 @ 24" O.C. 2x10 @ 16" O.C.	21'-2" 24'-3"

NOTES:
CEILING JOIST TABLE BASED ON HF #2, Fb=850 PSI (REPETITIVE MEMBER USE), Fv = 150 PSI E=1.3X10^6 PSI, DEFL. < L/240

ATTIC LIVE LOAD = 10.0 PSF
CEILING DEAD LOAD = 5.0 PSF

CEILING JOIST SCHEDULE — SCALE: NONE — 3

NOTES:
1. AT NON-SHEAR WALLS, NAIL STUDS TOGETHER WITH 10d-F NAILS @ 8" O.C.
2. ADDITIONAL STUDS REQUIRED AS NAILERS, ETC. ARE NOT SHOWN.

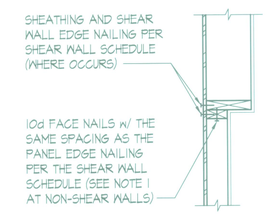

VARYING WALL SIZE

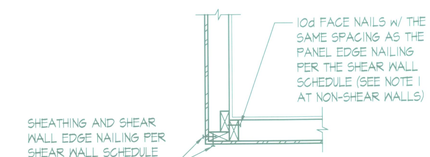

WALL CORNER

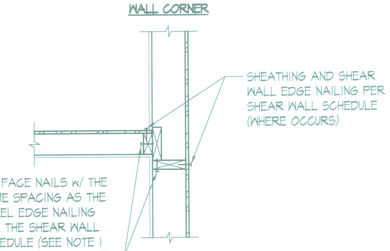

WALL INTERSECTION

TYPICAL WALL INTERSECTIONS - RESIDENTIAL — SCALE: NONE — 8

DETAIL — SCALE: NONE — 1

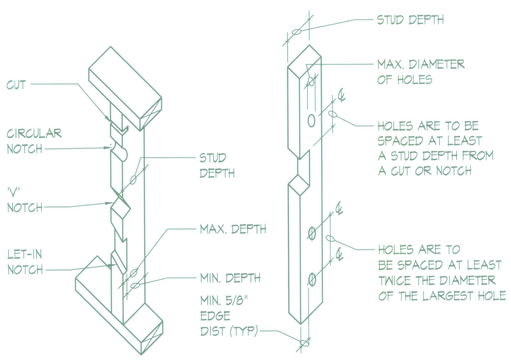

A. CUTTING AND NOTCHING WOOD STUDS
(DO NOT NOTCH MORE THAN 3 ADJACENT STUDS w/o REVIEW BY ENGINEER)

BEARING WALL STUDS:

STUD SIZE	MAX. DEPTH OF SAW CUT OR NOTCH	MIN. DEPTH REMAINING AFTER CUT OR NOTCH
2x4	1/8"	2-3/8"
2x6	1-3/8"	4-1/8"
2x8	1-7/8"	5-3/8"

NON-BEARING WALL STUDS:

STUD SIZE	MAX. DEPTH OF SAW CUT OR NOTCH	MIN. DEPTH REMAINING AFTER CUT OR NOTCH
2x4	1-1/2"	2"
2x6	2-3/8"	3-1/8"
2x8	3"	4-1/4"

B. HOLES IN WOOD STUDS

BEARING WALL:

STUD SIZE	MAX. DIAMETER OF HOLE
2x4	1-1/2"
2x6	2-3/8"
2x8	3"

NON-BEARING WALL:

STUD SIZE	MAX. DIAMETER OF HOLE
2x4	2-1/4"
2x6	3-3/8"
2x8	4-1/2"

TYPICAL ALLOWABLE HOLES AND NOTCHES IN STUDS — SCALE: NONE — 9

DETAIL — SCALE: NONE — 2

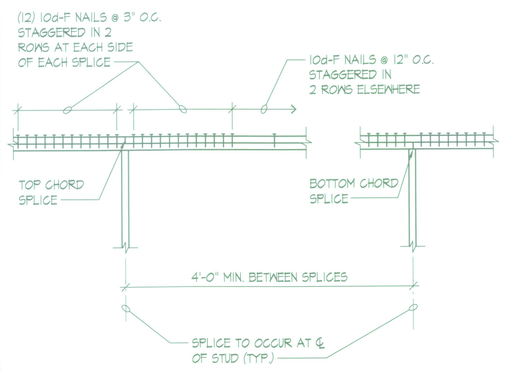

TYPICAL TOP PLATE SPLICE — SCALE: NONE — 6

NOTE:
FRAMING CONDITIONS VARY, FOR INFORMATION NOT NOTED SEE PLAN & APPROPRIATE DETAILS

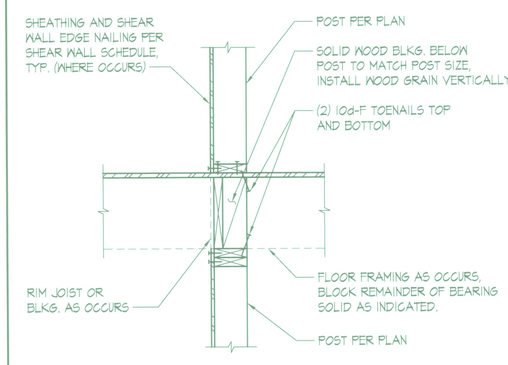

TYPICAL POST AT FLOOR — SCALE: NONE — 7

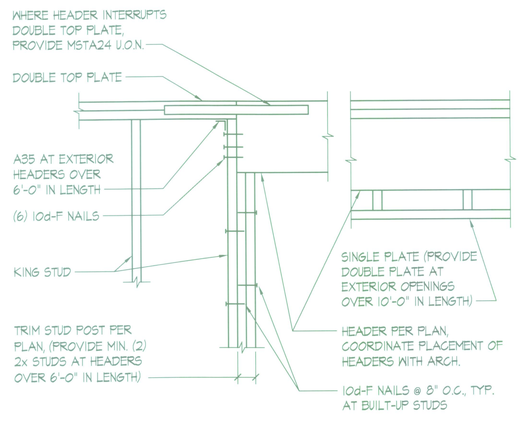

TYPICAL HEADER DETAIL — SCALE: NONE — 10

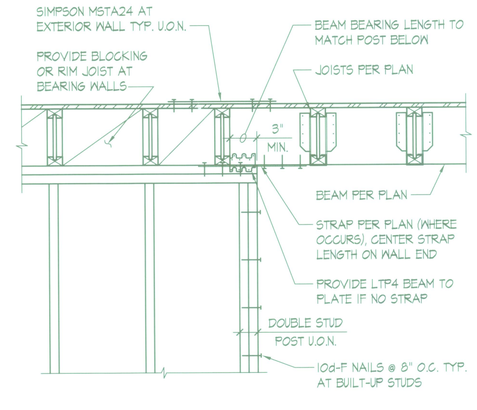

TYPICAL FLUSH BEAM DETAIL — SCALE: NONE — 11

DETAIL — SCALE: NONE — 12

QUANTUM
CONSULTING ENGINEERS
1511 THIRD AVENUE
SUITE 323
SEATTLE, WA 98101
TEL 206.957.3900
FAX 206.957.3901
www.quantumce.com

SEAL:

PROJECT:

RAM NIWAS CHURCH

AUBURN, WA 98001

OWNER: SATGURU RAM SINGH SATSUNGH
Contact Person: Mr. Sukhdev Aulakh
Contact Phone: (425) 255-6476

SHEET NOTES:

NO.	DESCRIPTION	DATE	BY
	PERMIT SUBMITTAL	8/2/11	

ISSUES: ◯ REVISIONS: △

P.M.	DPF
P.E.	WI
DRAWN BY:	SC
SCALE:	AS SHOWN
DATE:	8/2/2011
JOB NO.	11136.01

SHEET TITLE:

TYPICAL WOOD DETAILS

SHEET NO.

S4.1R

REVISION

File: 136-s401.dwg Plotted: Tue, 08/02/2011 12:23 pm