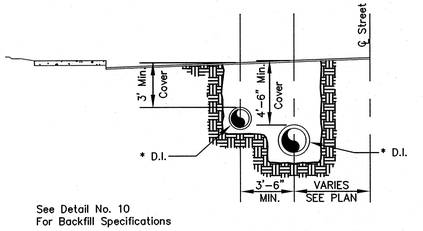

SECTION B-B
SCALE 1" = 5'-0"

DETAIL NO. 1
TYPICAL TRENCH CROSS SECTION
WITH TWO PARALLEL WATER LINES

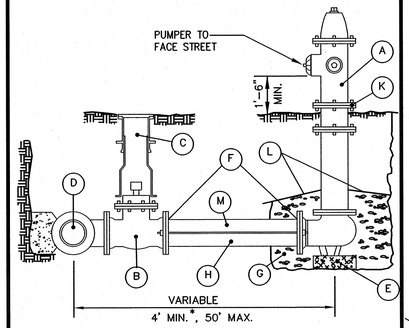

* Consult Engineer if less than 4 feet

Item	Quantity	Item Description
A	1	FIRE HYDRANT: 1-4" PUMPER-SEATTLE STANDARD THREAD 2-2½" HOSE NOZZLES-NATIONAL STD. THREAD MECHANICAL JOINT SHOE
B	1	AUXILIARY GATE VALVE: 6" - AWWA C509 RESILIENT SEAT, MJ x FL
C	1	VALVE BOX: CAST IRON SLIDE EXTENSION & BASE LID TO HAVE DROP IN HANDLE.
D	1	TEE: 6" FLANGED OUTLET
E	1	CONCRETE BRICK: 8" x 16" x 4"
F	2	RESTRAINED JOINT GLAND: MEGA-LUG OR EQUAL
G	¼ CY	1½" WASHED ROCK
H	Var.	6" DUCTILE IRON PIPE: CEMENT LINED, CLASS 52
J		DELETED
K	1	HYDRANT EXTENSION, WHERE REQUIRED
L	1	PLASTIC SHEETING OVER WASHED ROCK.
M	Var.	FIELD LOCK GASKETS AT PIPE BELL'S

1. Hydrants shall be painted with two coats of Seymour/Krylon Paint Equipment No. 00481 (Yellow).
2. All hydrants shall be break-away type, per King County standards
3. Pumper Cap shall be located one foot minimum behind sidewalk.
4. Hydrant to be located five feet behind curb if no sidewalk is present.

DETAIL NO. 3
FIRE HYDRANT ASSEMBLY

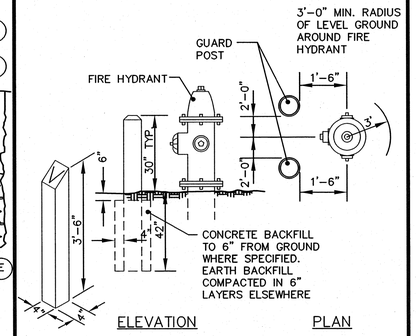

VALVE
MARKER POST

FIRE HYDRANT GUARD POST
GUARD POST WILL NOT BE ALLOWED IN THE STREET CLEAR ZONE AS PER KING COUNTY REQUIREMENTS

Notes:

1. Guard post shall be 9" diameter x 6' long precast concrete posts as per technical specifications. Paint with two (2) coats of Seymour/Krylon Paint Equipment Yellow No. 00481.
2. Valve marker post as specified. Paint as specified for hydrant guard post. Paint distance from the valve marker to the valve on the post with black enamel paint, using 2" high numerals.

DETAIL NO. 4
GUARD AND MARKER POSTS

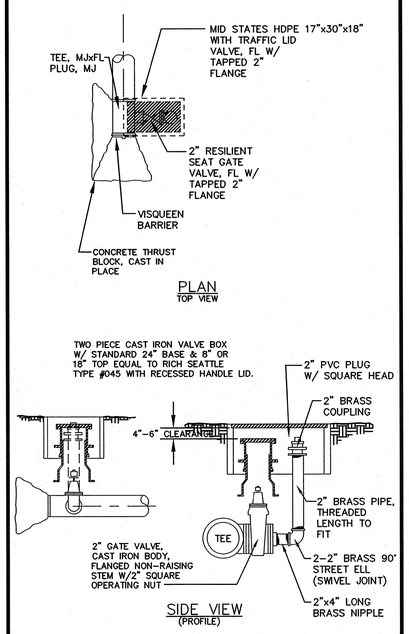

DETAIL NO. 5
2" BLOW OFF

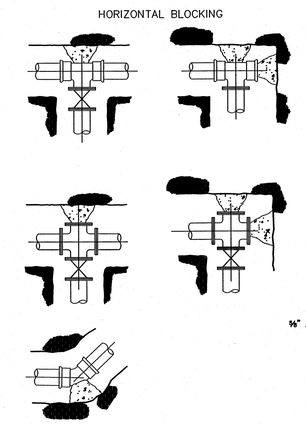

PIPE SIZE dia. in.	BEARING AREA of BLOCK sq. ft. TEES & BENDS	90° BEND	45° BEND	22½° BEND	11¼° BEND
6"	3	4	2	1.5	0.8
8"	5	7	4	2	1
10"	8	11.2	6	3	1.6
12"	13.0	18.0	10	5	3
16"	20	28.5	16	8	4

Notes:

1. All blocking shall be poured against firm undisturbed soil. blocking in organic soils or fill area to be designed by engineer.
2. Bearing area at fittings not given in bearing table shall be as directed by the Engineer.
3. When pouring against plugs and blind flanges, set steel meter box lid against fitting to keep concrete off bolts.
4. Layout to be approved by District prior to concrete pour.
5. For blocking scheme other than shown above, contact District Engineer for detail.

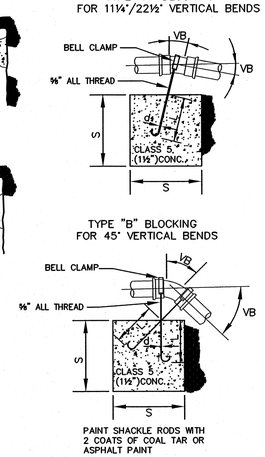

TYPE "A" BLOCKING FOR 11¼°/22½° VERTICAL BENDS						
		VB		S	d	L
PIPE SIZE Nom. diameter inches	TEST PRESSURE psi	VERTICAL BEND degrees	CONC. BLOCKING cu. ft.	SIZE OF BLOCK feet	DIAMETER OF SHACKLE RODS inches	DEPTH OF RODS IN CONCRETE feet
4"	250	11¼°	8	2.0	5/8"	1.5
		22½°	11	2.2		2.0
6"	250	11¼°	11	2.2	5/8"	2.0
		22½°	25	2.9		
8"	250	11¼°	16	2.5	5/8"	2.0
		22½°	47	3.6		
12"	250	11¼°	54	3.8	5/8"	2.0
		22½°	120	5.0	3/4"	2.5
16"		11¼°	96	4.5	7/8"	3.0
		22½°	215	6.0	1-¼"	4.0

TYPE "B" BLOCKING FOR 45° VERTICAL BENDS						
4"	250	45°	30	3.1	5/8"	2.0
6"			68	4.1		
8"			123	5.0		
12"	250		294	6.6	3/4"	3.0
16"	*		*	*	*	*

* To be designed by Engineer

DETAIL NO. 6
CONCRETE BLOCKING

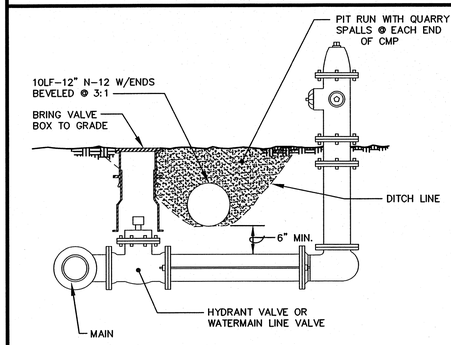

DETAIL NO. 2
INSTALLATION OF VALVES
& HYDRANTS IN DITCHES

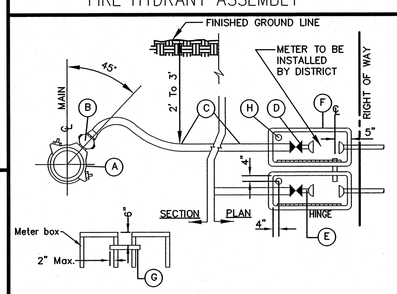

TOP OF SETTER TO BE 6" FROM FINISHED GRADE

A. Service Clamp, Ford model FC 101 or FC 202, or Equal.
B. Corporation Stop, Ford or Equal. I.P. Threads.
C. Copper Tubing, ASTM B 88, Type K.
D. Curb Stop, Ford or Approved Equal. Curb Stops to be 18" Deep Minimum to 36" Deep Maximum.
E. 1" Copper Setter with Locking Stop, C.T.S. Inlet and Horizontal Outlet, Angle Check Valve Outlet, 12" High per District Requirements. Ford No. VH 74-12W-11-44, or Equal. 1" x 4" brass nipple between curb stop and setter.
F. Traffic Areas: Meter Box Shall be Mid States HDPE 13"x24"x18" with Mid States 13"x24" ductile iron lid with reader. Traffic Lid Required With 2" M.X.U Hole.
F. Non Traffic Areas: Raven Meter Box 13"x24"x18" with reader lid.
G. 2" PVC SDR 21Connecting Pipe for Radio Read Conduit (Length as Required) Locate 6" Below Top of Box and 5" From Customer End of Box. 2" ID, 2-3/8" OD, 2-1/2" Hole Typical
H. 2-1/2" Diameter Hole Located 4" From Both Edges of Lid

NOTES:

1. Single Service Lines are 1" Diameter.
2. Equal Materials Must be Approved by the District.
3. Copper Setter for Services with Multi-Residential Equivalents and Equivalents and all Commercial Services Shall Have a By-Pass with a Valve with Padlock Wings. Ford No. VFH66-12B or Equal.
4. No Meter Boxes in Sidewalks or Driveways.
5. After District Requirements Have Been Met, Meter(s) will be Installed Upon Completion of the Structure's Foundation and Roof.
6. Bedding Material Shall be used to Backfill Around Corp. Stop and Service Line.

DETAIL NO. 8
SERVICE CONNECTIONS BEHIND SIDEWALK

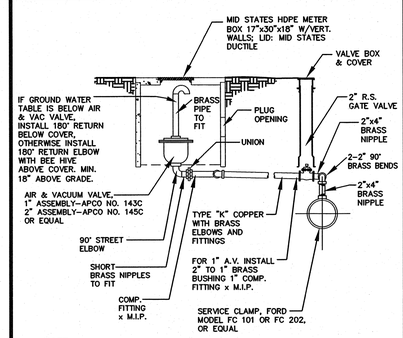

NOTE:
For 8" ductile iron pipe a 1" air/vac assembly is to be installed. For 12" and larger ductile iron pipe a 2" air/vac assembly is to be installed.

DETAIL NO. 9
AIR AND VACUUM RELEASE ASSEMBLY

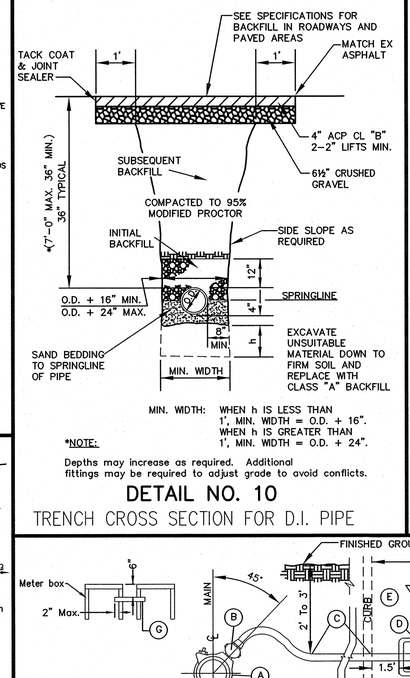

MIN. WIDTH: WHEN h IS LESS THAN 1', MIN. WIDTH = O.D. + 16". WHEN h IS GREATER THAN 1', MIN. WIDTH = O.D. + 24".

*NOTE:
Depths may increase as required. Additional fittings may be required to adjust grade to avoid conflicts.

DETAIL NO. 10
TRENCH CROSS SECTION FOR D.I. PIPE

CONTRACTOR TO TRANSFER METER OR INSTALL NEW METER AS FURNISHED BY THE DISTRICT

NOTE:
TYPICAL 1" WATER SERVICE REPLACEMENT. NEW SETTER TO BE OFFSET SUFFICIENTLY FROM OLD SERVICE TO PERMIT CONNECTION

MATERIAL USED IN REPAIR OF AN EXISTING SERVICE SHALL BE APPROVED BY THE DISTRICT ON A CASE BY CASE BASIS

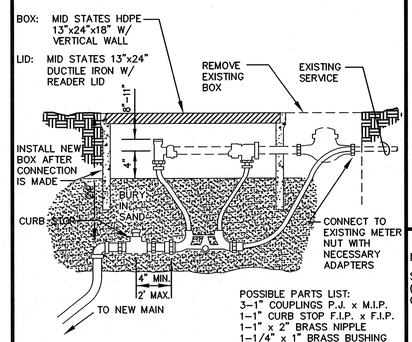

POSSIBLE PARTS LIST:
3-1" COUPLINGS P.J. x M.I.P.
1-1" CURB STOP F.I.P. x F.I.P.
1-1" x 2" BRASS NIPPLE
1-1/4" x 1" BRASS BUSHING

DETAIL NO. 11
REPLACEMENT OF
EXISTING SERVICE

Notes:

1. Timber baffles to be installed where directed by the Engineer or District Inspector.
2. All backfill shall be seeded.

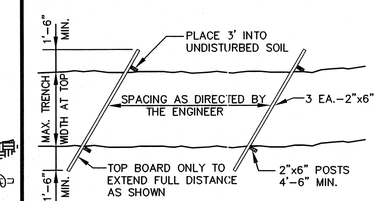

DETAIL NO. 12
HILL HOLDER

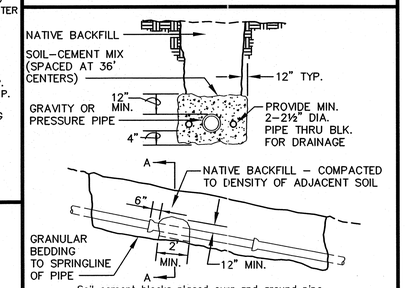

Soil cement blocks placed over and around pipe. Tamped into place before placing backfill. Use 10 percent cement with 90 percent native soil and water to suit to form a dry mix that will hold its shape when molded into a ball. Omit soil cement blocks on slopes less than 15 percent

NOTE: "FIELD LOK" GASKETS MAY BE USED IN LIEU OF PIPE ANCHORS.

DETAIL NO. 13
PIPE ANCHORS

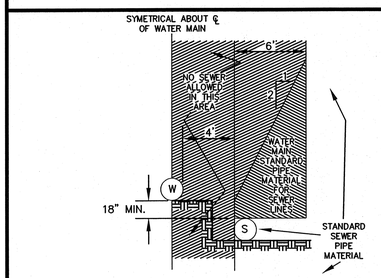

DETAIL NO. 7
FOR PARALLEL CONSTRUCTION

Table 1

WATER MAIN STANDARD PIPE MATERIAL

TYPE OF PIPE	AWWA (ASTM) STANDARD PIPE	JOINT	FITTINGS
Ductile Iron	C 151 & C104	C 111	C 153

All water and sewer line separation shall meet DOE Standards.

For Perpendicular Construction
For perpendicular sewer line crossings, lay sewer below water lines and provide 18 inches of separation between inverts of water lines and crown of sewer pipes. If this is not possible, use material standards as set forth above for the sewer with minimum 18 feet length centered over crossing to maximize joint separation.

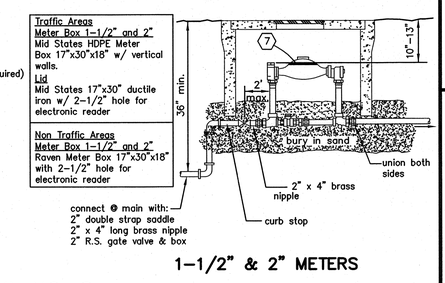

1-1/2" & 2" METERS

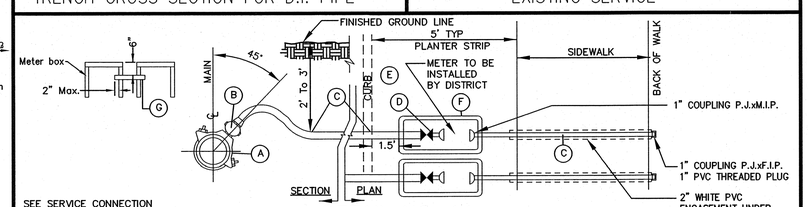

SEE SERVICE CONNECTION DETAIL NO. 8 FOR ADDITIONAL CALLOUTS

DETAIL NO. 14
SERVICE CONNECTIONS IN PLANTER STRIP

PLOT DATE & TIME
FILE NAME (UPDATED BY)
LAYOUT NAME

DESIGNED
DRAWN TLR
CHECKED JINGSON

SYM	REVISION	DATE	BY	APP'D
	REVISE WATER PER COAL CREEK UTILITY DISTRICT COMMENTS	08/21/08	JGC	DGS

Pacific Engineering Design, LLC
15445 53RD AVE. S. SEATTLE, WA 98188
PHONE: (206) 431-7970 FAX: (206)
388-1648 WEB SITE: PACENG.COM
Civil Engineering and Planning Consultants

COAL CREEK UTILITY DISTRICT
6801 132ND PLACE S.E.
NEWCASTLE, WASHINGTON 98059

REFERENCE INFORMATION
FIELD BOOK:
SURV. CPU FILE:
DATUM: NGVD29

DATE JULY 26, 2007
SCALE NOTED

VARNEY SUBDIVISION
STANDARD DETAILS

JOB NUMBER 07019.00
DWG NO. 06015WADTLS-P3.DWG
SHEET 3 OF 3

JOB No. 06015