REVISIONS:

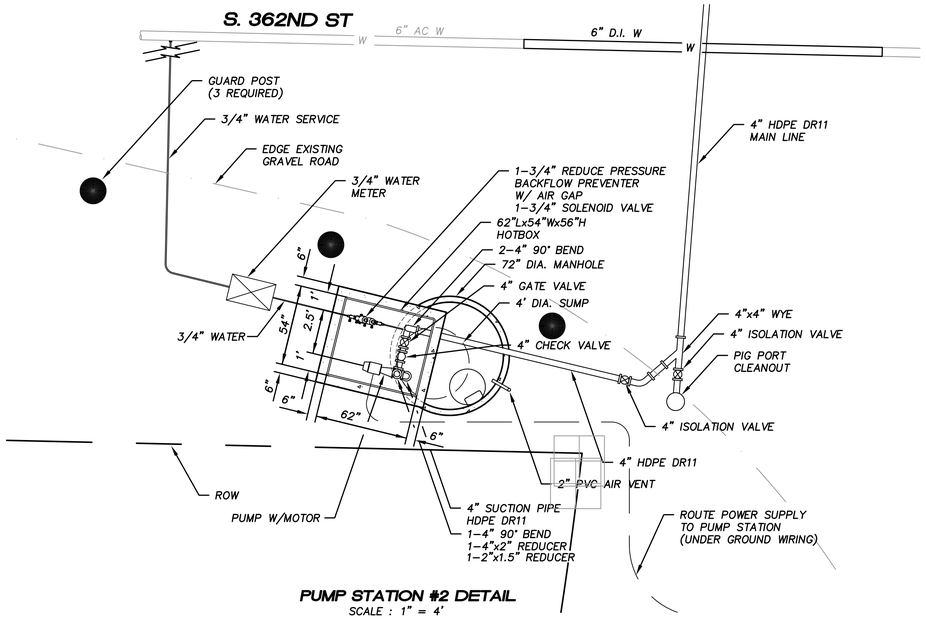

PUMP STATION #2 DETAIL
SCALE : 1" = 4'

N.W. 1/4, SEC. 26, T. 21 N., R. 4 E., W.M.

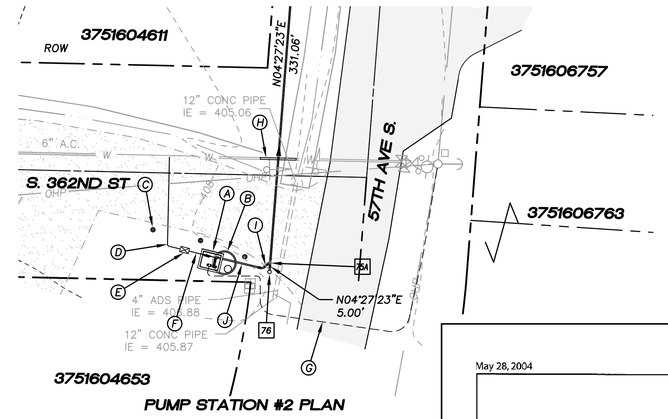

PUMP STATION #2 PLAN

75A 0+76.08, 25.00' L
1-4" HDPE DR 11 WYE
1-4" HDPE DR 11 SPOOL
1-4" ISOLATION GATE VALVE W/BOX
PER LAKEHAVEN STANDARD PLANS PSS-03, PSS-05 AND PSS-06, SEE SHEET SS20

76 0+71.08, 25.00' L
1-4" CLEANOUT W/PIG PORT #28
LAUNCH AT END OF PIPE RUN
2-4" HDPE DR 11 SPOOLS
1-4" ISOLATION GATE VALVE W/BOX
PER LAKEHAVEN STANDARD PLANS PSS-01, PSS-03, PSS-05 AND PSS-06, SEE SHEET SS20
RIM=407.8±
INV=402.0±

20 0 10 20 40
GRAPHIC SCALE
SCALE : 1" = 20'

(A) HOTBOX SEE DETAIL RIGHT HEREON
(B) FLUSHING PUMP STATION IN 72"ø MANHOLE SEE DETAIL RIGHT HEREON
(C) GUARD POST (3 REQURIED)
(D) 30LF 3/4" WATER
(E) 3/4" WATER METER
(F) 6LF 3/4" WATER
(G) ROUTE POWER SUPPLY TO PUMP STATION (UNDER GROUND WIRING)
(H) INSTALL 20LF D.I. CL 50 WATER MAIN TO REPLACE EXISTING 6" AC WATER MAIN
(I) 5LF 4" HDPE DR11
(J) 13LF 4" HDPE DR11

LAKEHAVEN UTILITY DISTRICT

O Water Plan θ Sewer Plan

Dated _____

APPROVED FOR CONSTRUCTION SUBJECT TO CHANGES NOTED

The District's review is not a check of any dimension or quantities and will not relieve the Developer from responsibility for errors of any sort. No changes shall be made in the plans except by the consent of the District.

General Manager/District Engineer **Date**

This construction plan will expire one year from plan approval date, if construction has not commenced.

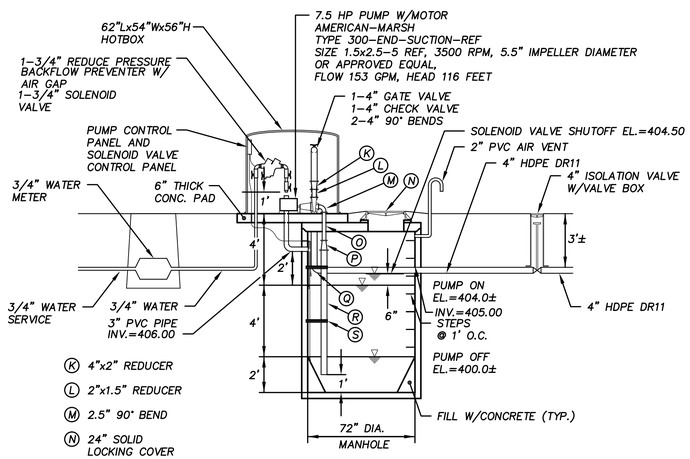

(K) 4"x2" REDUCER
(L) 2"x1.5" REDUCER
(M) 2.5" 90° BEND
(N) 24" SOLID LOCKING COVER RIM=408.0±
(O) 2.5" HDPE DR11
(P) 4"x2.5" REDUCER
(Q) 4" 90° BEND
(R) 4" SUCTION PIPE HDPE DR11
(S) PIPE ANCHORS @ 3' O.C.

PUMP STATION #2 SECTION
SCALE : 1" = 4'

PUMP STATION #2 LOCATION MAP
SCALE : 1" = 500'

May 28, 2004

300 SERIES REF
FLEX-COUPLED END SUCTION PUMP ONLY

AMERICAN-MARSH PUMPS

*ALL DIMENSIONS ARE IN INCHES AND ± 0.375".
*NOT FOR CONSTRUCTION, UNLESS CERTIFIED BY ENGINEERING.

PUMP SIZE DISCH	PUMP SIZE SUCT	CASE BORE	A	B	CP	D	E1	E2	F	G	H	H1	J	K1	N & V	U	K	T	L	X	Y
1 1/4	2	5	7.500	10.500	14.188	4.500	2.750	3.938	5.500	0.625	0.563	0.563	2.000	3.938	1.938	0.875	0.250	1.000	1.438	5.500	3.125
1 1/2	2 1/2	5	8.250	10.500	14.188	4.500	2.750	3.938	6.313	0.625	0.563	0.563	2.000	3.938	1.938	0.875	0.250	1.000	1.438	5.500	3.188
2	2 1/2	5	9.438	10.500	14.188	5.250	2.750	3.938	7.500	0.625	0.563	0.563	2.000	3.938	1.938	0.875	0.250	1.000	1.438	6.313	3.188
2 1/2	3	5	11.000	10.500	14.375	6.250	3.750	4.313	8.375	0.563	0.563	0.563	2.563	4.938	1.938	0.875	0.250	1.000	1.438	7.063	3.938
1 1/4	2	7	9.438	10.500	14.125	5.250	2.750	3.938	7.500	0.625	0.563	0.563	2.000	3.938	1.938	0.875	0.250	1.000	1.438	6.313	3.125
1 1/2	2 1/2	7	9.438	10.500	14.188	5.250	2.750	3.938	7.500	0.625	0.563	0.563	2.000	3.938	1.938	0.875	0.250	1.000	1.438	6.313	3.188
2	2 1/2	7	10.438	10.500	14.250	6.250	2.750	4.313	8.375	0.500	0.563	0.563	2.000	3.938	1.938	0.875	0.250	1.000	1.438	7.125	3.938
2 1/2	3	7	11.000	10.500	14.438	6.250	3.750	4.313	8.375	0.563	0.563	0.563	2.563	4.938	1.938	0.875	0.250	1.000	1.438	7.875	3.938
3	4	7	12.625	10.500	14.500	7.125	3.750	4.313	9.875	0.625	0.563	0.563	2.563	4.938	1.938	0.875	0.250	1.000	1.438	8.875	4.938
4	5	7	12.625	10.500	14.250	7.000	7.000	4.313	9.875	0.500	0.500	0.563	2.500	5.000	1.938	0.875	0.250	1.000	1.438	8.875	5.000
1 1/4	2	8	9.438	10.500	14.125	6.250	2.750	4.313	7.500	0.500	0.563	0.563	2.000	3.938	1.938	0.875	0.250	1.000	1.438	7.125	3.125
1 1/2	2 1/2	8	10.438	10.500	14.125	6.250	2.750	4.313	8.375	0.563	0.563	0.563	2.000	3.938	1.938	0.875	0.250	1.000	1.438	7.125	3.938
2	2 1/2	8	10.438	10.500	14.188	6.250	2.750	4.313	8.375	0.500	0.563	0.563	2.000	3.938	1.938	0.875	0.250	1.000	1.438	7.875	3.938
2 1/2	3	8	12.625	10.500	14.250	7.125	3.750	4.313	9.875	0.688	0.563	0.563	2.563	4.938	1.938	0.875	0.250	1.000	1.438	8.875	3.938
3	4	8	13.625	11.500	18.563	7.125	3.750	4.375	11.000	0.563	0.563	0.563	2.563	4.938	3.125	1.125	0.313	1.063	1.938	9.875	4.938
4	5	8	14.188	13.500	18.563	8.000	4.750	4.313	11.000	0.750	0.750	0.563	3.125	6.313	3.125	1.125	0.313	1.063	1.938	11.000	4.938
5	6	8	15.750	13.500	18.750	9.875	3.938	4.375	12.438	0.625	0.750	0.563	3.188	6.313	3.125	1.125	0.313	1.063	1.938	12.438	5.500
6	8	8	21.688	14.500	19.500	11.000	5.938	4.375	17.750	0.813	0.875	0.563	3.938	7.875	3.125	1.125	0.313	1.063	1.938	15.750	6.313
1 1/4	2	10	12.625	10.500	14.125	7.000	3.750	4.313	9.875	0.500	0.563	0.563	2.563	4.938	1.938	0.875	0.250	1.000	1.438	8.875	3.938
1 1/2	2 1/2	10	12.625	10.500	14.188	7.000	3.750	4.313	9.875	0.500	0.563	0.563	2.563	4.938	1.938	0.875	0.250	1.000	1.438	8.875	3.938
2	2 1/2	10	12.625	10.500	14.125	7.000	3.750	4.313	9.875	0.500	0.563	0.563	2.563	4.938	1.938	0.875	0.250	1.000	1.438	8.875	3.938
2 1/2	3	10	14.188	13.500	18.500	8.000	4.750	4.313	11.000	0.750	0.750	0.563	3.125	6.313	3.125	1.125	0.313	1.063	1.938	9.875	3.938
3	4	10	15.750	13.500	18.563	7.875	4.750	4.313	12.438	0.625	0.750	0.563	3.125	6.313	3.125	1.125	0.313	1.063	1.938	11.000	4.938
4	5	10	15.750	12.500	18.563	9.000	4.750	4.375	12.438	0.750	0.750	0.563	3.125	6.313	3.125	1.125	0.313	1.063	1.938	11.000	5.500
5	6	10	15.750	13.500	18.563	9.875	4.750	4.375	12.438	0.625	0.750	0.563	3.188	6.313	3.125	1.125	0.313	1.063	1.938	14.000	5.500
6	8	10	17.750	14.500	19.000	9.875	5.938	4.375	13.813	0.688	0.875	0.563	3.938	7.875	4.375	1.625	0.500	1.875	4.000	14.000	6.313
8	10	10	21.688	15.313	19.438	11.000	5.938	4.375	17.750	1.000	1.000	0.563	3.938	7.875	4.375	1.625	0.500	1.875	4.000	15.750	7.063
1 1/2	2 1/2	13	13.625	17.000	18.563	8.000	3.750	4.313	11.000	0.750	0.563	0.563	2.563	4.938	3.125	1.125	0.313	1.063	1.938	9.875	4.938
2	2 1/2	13	13.563	13.500	18.563	9.000	3.750	4.375	11.000	0.750	0.563	0.563	2.563	4.938	3.125	1.125	0.313	1.063	1.938	11.000	4.938
2 1/2	3	13	15.750	13.500	18.375	8.875	4.750	4.375	12.438	0.625	0.750	0.563	3.125	6.313	3.125	1.125	0.313	1.063	1.938	11.000	4.938
3	4	13	15.750	13.500	18.563	9.875	4.750	4.375	12.438	0.688	0.750	0.563	3.125	6.313	3.125	1.125	0.313	1.063	1.938	12.438	4.938
4	5	13	15.750	13.500	18.563	9.875	4.750	4.375	12.438	0.625	0.750	0.563	3.125	6.313	3.125	1.125	0.313	1.063	1.938	12.438	5.500
5	6	13	19.688	14.500	18.813	11.000	5.938	4.375	15.750	0.688	0.875	0.563	3.938	7.875	4.375	1.625	0.500	1.875	4.000	14.000	5.500
6	8	13	21.688	14.500	19.063	11.000	5.938	4.375	17.750	0.688	0.875	0.563	4.125	7.875	4.375	1.625	0.500	1.875	4.000	15.750	6.313
8	10	13	21.688	19.625	26.688	14.000	5.938	4.313	17.750	0.813	0.875	0.563	3.938	7.875	4.625	1.875	0.500	2.125	4.375	17.750	7.875
3	4	16	17.313	14.500	18.688	11.000	4.750	4.375	14.000	0.688	0.750	0.563	3.125	6.313	4.375	1.625	0.500	1.875	4.000	14.000	4.938
4	5	16	19.688	14.500	18.813	11.000	5.938	4.375	15.750	0.688	0.875	0.563	3.938	7.875	4.375	1.625	0.500	1.875	4.000	14.000	5.500
5	6	16	19.688	14.500	18.813	12.438	5.938	4.313	15.750	0.688	0.875	0.563	3.938	7.875	4.375	1.625	0.500	1.875	4.000	15.750	5.500
6	8	16	21.688	14.500	19.063	12.438	5.938	4.313	17.750	0.688	0.875	0.563	3.938	7.875	4.375	1.625	0.500	1.875	4.000	17.750	6.313
8	10	16	21.688	19.625	26.688	14.000	5.938	4.313	17.750	0.813	0.875	0.563	3.938	7.875	4.625	1.875	0.500	2.125	4.375	19.688	7.875
10	12	16	25.625	21.000	30.875	15.750	7.875	5.500	19.625	1.188	1.000	1.000	5.875	11.000	7.250	2.750	0.500	2.125	4.375	19.625	9.500
12	14	16	31.500	21.625	29.125	19.625	7.875	7.000	23.625	1.188	1.000	0.875	5.875	11.875	7.250	2.188	0.625	2.938	4.625	23.625	11.000
5	6	20	24.375	19.625	26.875	14.000	5.875	7.000	19.625	1.375	1.000	0.563	4.750	7.875	7.250	1.875	0.625	2.438	4.625	17.750	5.500
6	8	20	21.688	19.625	26.063	14.750	5.938	7.000	17.750	0.938	0.875	0.563	3.938	7.875	5.000	2.125	0.625	2.438	4.625	19.688	7.063
8	10	20	28.375	21.000	26.875	15.750	9.500	5.500	23.625	1.188	1.000	1.000	6.250	11.875	7.250	2.750	0.625	2.438	4.625	19.625	9.500
10	12	20	28.375	21.000	36.875	16.750	9.500	5.500	23.625	1.188	1.000	0.875	6.250	11.875	7.250	2.750	0.625	2.438	4.625	21.500	9.500

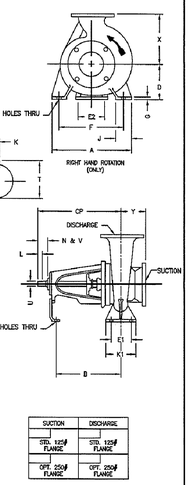

SUCTION	DISCHARGE
STD. 125# FLANGE	STD. 125# FLANGE
OPT. 250# FLANGE	OPT. 250# FLANGE

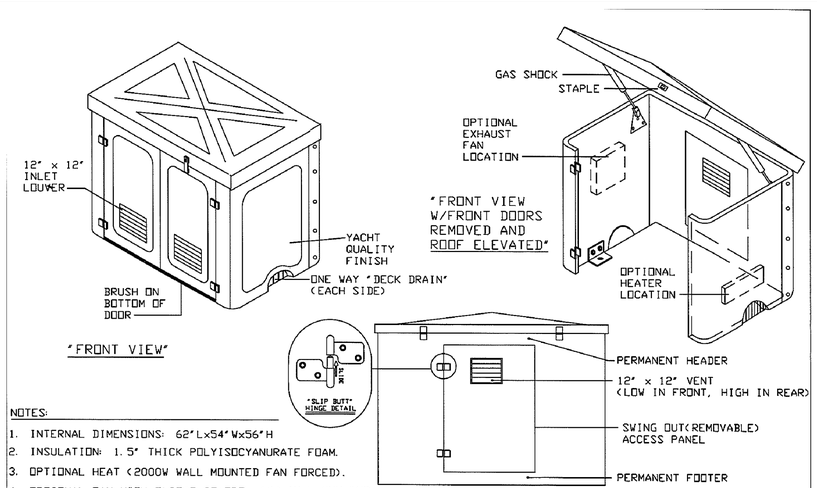

NOTES:
1. INTERNAL DIMENSIONS: 62"Lx54"Wx56"H
2. INSULATION: 1.5" THICK POLYISOCYANURATE FOAM.
3. OPTIONAL HEAT (2000W WALL MOUNTED FAN FORCED).
4. OPTIONAL FAN WITH T'STAT CONTROL AND AUTO SHUTTER.

RESTRICTED DRAWING PATENT # 4,726,394.

Hot Box®
250 LANE AVE. N.
JACKSONVILLE, FLORIDA 32254
(904) 786-0204 (800) 736-0238
FAX (904) 783-6965
http://www.hot-box.com

TITLE: STANDARD # PG10,000 "PUMP GUARD"™ (MODULAR FIBERGLASS ENCLOSURE)
ENGINEER / CONTRACTOR:
LOCATION: CATALOG DRAWING
BY/DATE/DWG: SBT / 7-27-99 PG10M
APPROVED/DATE:
REV. 1: REV. 2: REV. 3: SCALE: N. T. S. REP. / DISTRIBUTOR: QUOTE NO.:

Pacific Engineering Design, LLC
Civil Engineering and Planning Consultants
15445 53RD AVE. S.,
SEATTLE, WA 98188
PHONE: (206) 431-7970
FAX: (206) 388-1648
WEB SITE: PACENG.COM

STATE OF WASHINGTON — KINGSONG FENG — 32575 — REGISTERED PROFESSIONAL ENGINEER — 04/05/12

PROJECT No. 6304025

LAKEHAVEN UTILITY DISTRICT PROJECT NO. 6304025
PEPPER HILL ESTATES
KING COUNTY, WA.

FOR:
PACIFIC HOUSING GROUP I, LLC
1420 5TH AVE, SUITE 2200
SEATTLE, WA 98101-2346
PHONE: (206) 521-5979 , FAX: (206) 224-2880

PROJECT NO.:	05052
DRAWN BY:	JQC
ISSUE DATE:	09-30-05
SHEET REV.:	09-29-10

FORCE MAIN SANITARY SEWER PUMP STATION DETAILS

05052SS23-SS23.DWG

SS23